CELETTE

TETRAC +

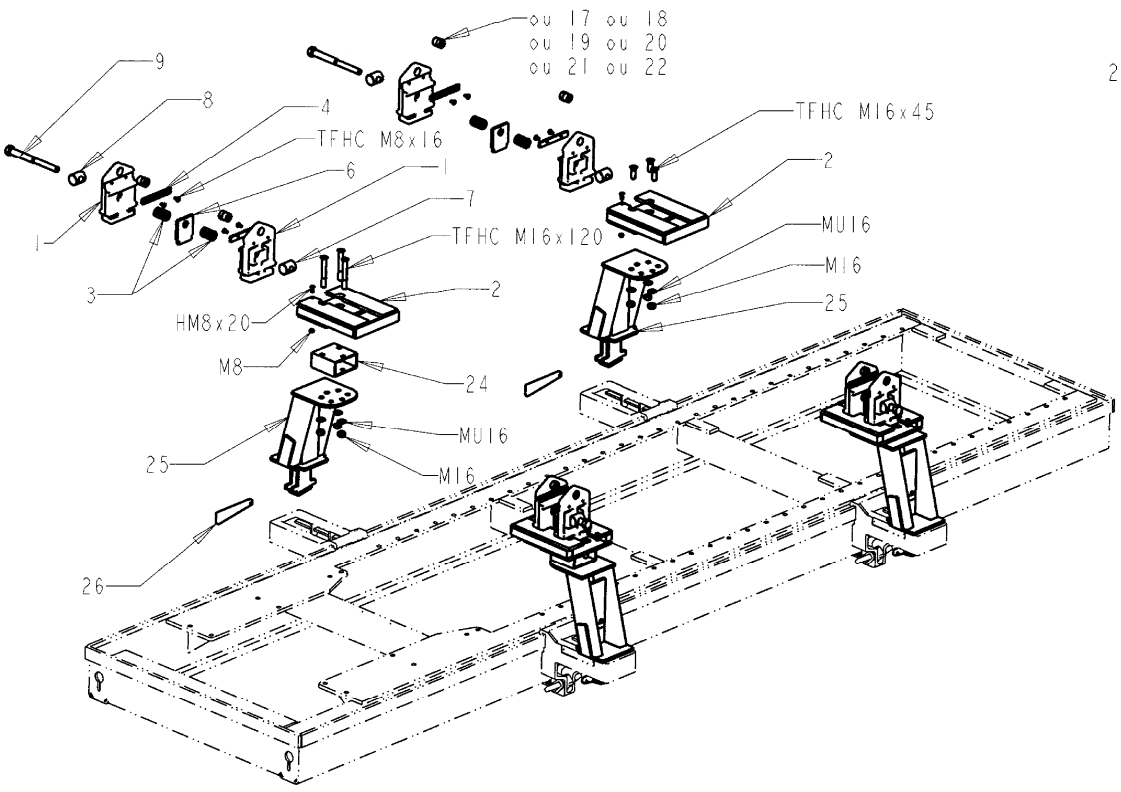

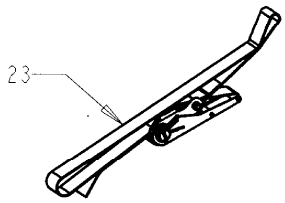

REP.	REFERENCE	PDS	NB
1	9188.7003	5.35	8
2	9188.7002	12.2	4
3	RESC.35088300	0.1	8
4	M02	0.2	8
6	9169.7006	0.6	4
7	9169.7007	0.4	4
8	9169.7008	0.4	4
9	9169.7009	0.9	4
17	9169.7017	0.15	4
18	9169.7018	0.15	4
19	9169.7019	0.15	4
20	9169.7020	0.15	4
21	9169.7021	0.15	4
22	9169.7022	0.35	4
23	SN.2534.B	3.5	2
24	AN.16.1	1.5	2
25	9188.7001	14.8	4
26	AT5976.10	1.0	4

	TF HC M8x16	16
	TF HC M16x45	12
	TF HC M16x120	6
	HM 8x20	4
	MU 16	12
	M 16	12
	M 8	4

9188.033

187Kg	27.08.2008	9188.033-RA4-1	01

CELETTE
VIENNE-FRANCE

© Copyright 2000 CELETTE S.A. - All rights reserved. No part of this document may be reproduced in any form, by photostat, xerography or any other means, or incorporated into any informational retrieval system, electronic or mechanical, without the permission of the copyright owner.